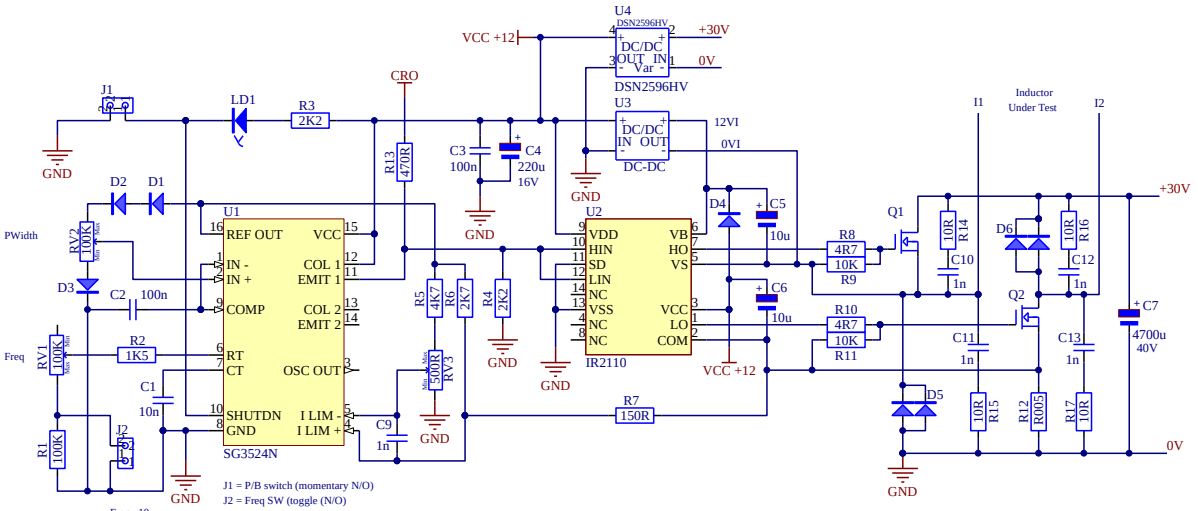
U4
DSN2596HV
DC/DC
OUT IN
Var
DSN2596HV
+30V
0V
VCC +12
U3
DC/DC
IN OUT
DC-DC
12VI
0VI
CRO
J1
LD1
R3
2K2
R13
470R
C3
100n
C4
220u
16V
GND
D2
D1
U1
REF OUT
VCC
IN -
IN +
COL 1
EMIT 1
COMP
COL 2
EMIT 2
RT
CT
OSC OUT
SHUTDN
GND
I LIM -
I LIM +
SG3524N
PWidth
RV2
100K
D3
C2
100n
Freq
RV1
100K
R2
1K5
C1
10n
R1
100K
J2
Freq x10
R5
4K7
R6
2K7
RV3
500K
R4
2K2
C9
1n
U2
VDD
HIN
SD
LIN
NC
VSS
NC
NC
VB
HO
VS
VCC
LO
COM
IR2110
D4
C5
10u
C6
10u
R7
150R
R8
4R7
10K
R9
R10
4R7
10K
R11
Q1
Q2
I1
Inductor
Under Test
I2
10R
R14
C10
1n
D6
10R
R16
C12
1n
C11
1n
C13
1n
D5
10R
R15
R12
R005
R17
10R
C7
4700u
40V
0V
J1 = P/B switch (momentary N/O)
J2 = Freq SW (toggle (N/O)
LD1 = Glow when power applied Bright under test
RV3= Set Max FET/Inductor Current
D4 = Not installed or tried, experimental in lieu of U3