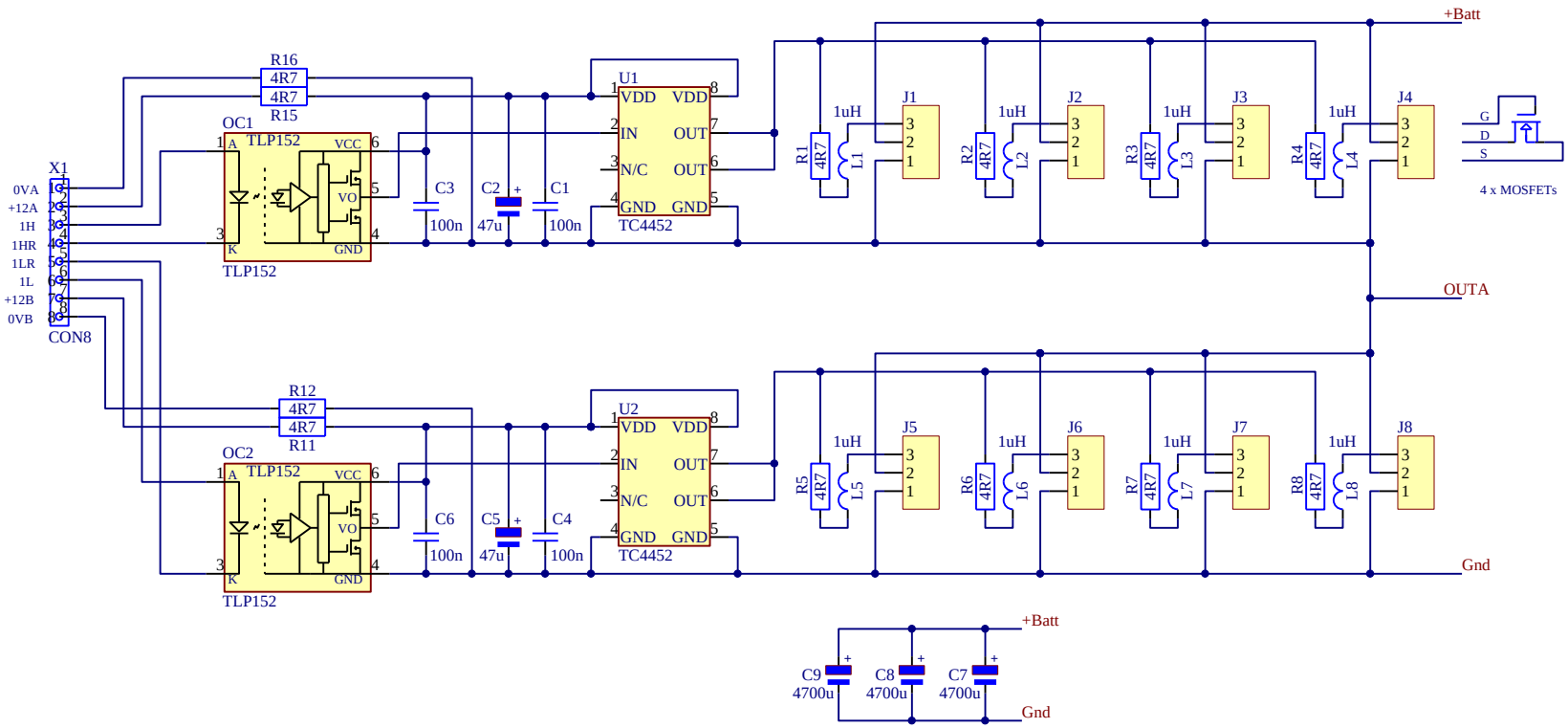
+Batt
OUTA
Gnd
X1
CON8
0VA
+12A
1H
1HR
1LR
1L
+12B
0VB
R16
4R7
4R7
R15
OC1
TLP152
VCC
VO
GND
A
K
C3
100n
C2
47u
C1
100n
U1
VDD
IN
N/C
GND
OUT
TC4452
R1
4R7
L1
1uH
J1
R2
4R7
L2
1uH
J2
R3
4R7
L3
1uH
J3
R4
4R7
L4
1uH
J4
G
D
S
4 x MOSFETs
R12
4R7
4R7
R11
OC2
TLP152
C6
100n
C5
47u
C4
100n
U2
TC4452
R5
4R7
L5
1uH
J5
R6
4R7
L6
1uH
J6
R7
4R7
L7
1uH
J7
R8
4R7
L8
1uH
J8

+Batt
C9
4700u
C8
4700u
C7
4700u
Gnd