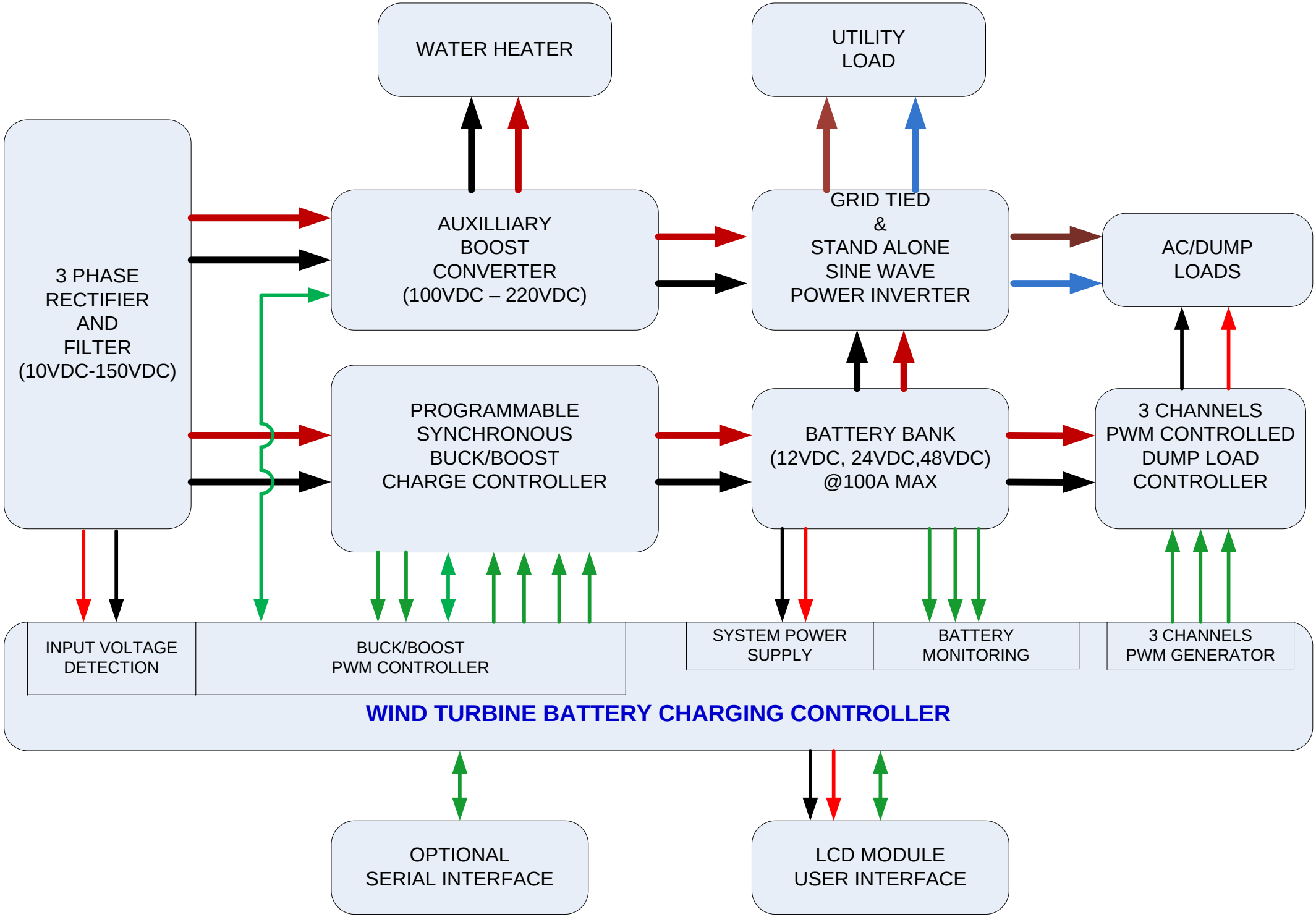
WATER HEATER
UTILITY LOAD
3 PHASE RECTIFIER AND FILTER (10VDC-150VDC)
AUXILLIARY BOOST CONVERTER (100VDC – 220VDC)
GRID TIED & STAND ALONE SINE WAVE POWER INVERTER
AC/DUMP LOADS
PROGRAMMABLE SYNCHRONOUS BUCK/BOOST CHARGE CONTROLLER
BATTERY BANK (12VDC, 24VDC,48VDC) @100A MAX
3 CHANNELS PWM CONTROLLED DUMP LOAD CONTROLLER
INPUT VOLTAGE DETECTION
BUCK/BOOST PWM CONTROLLER
SYSTEM POWER SUPPLY
BATTERY MONITORING
3 CHANNELS PWM GENERATOR
WIND TURBINE BATTERY CHARGING CONTROLLER
OPTIONAL SERIAL INTERFACE
LCD MODULE USER INTERFACE