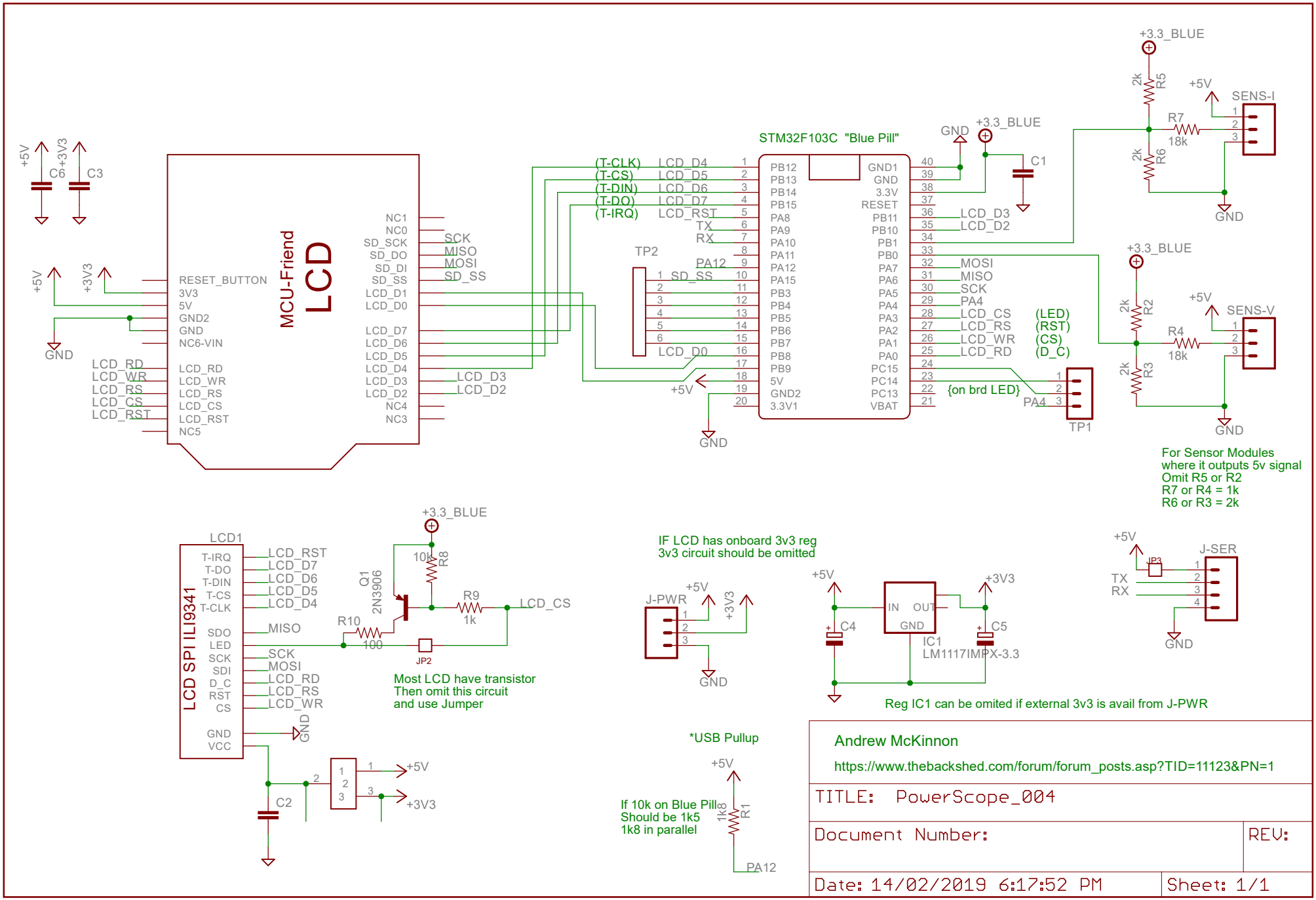

Andrew McKinnon

https://www.thebackshed.com/forum/forum_posts.asp?TID=11123&PN=1

TITLE: PowerScope_004

Document Number:

REV:

Date: 14/02/2019 6:17:52 PM

Sheet: 1/1