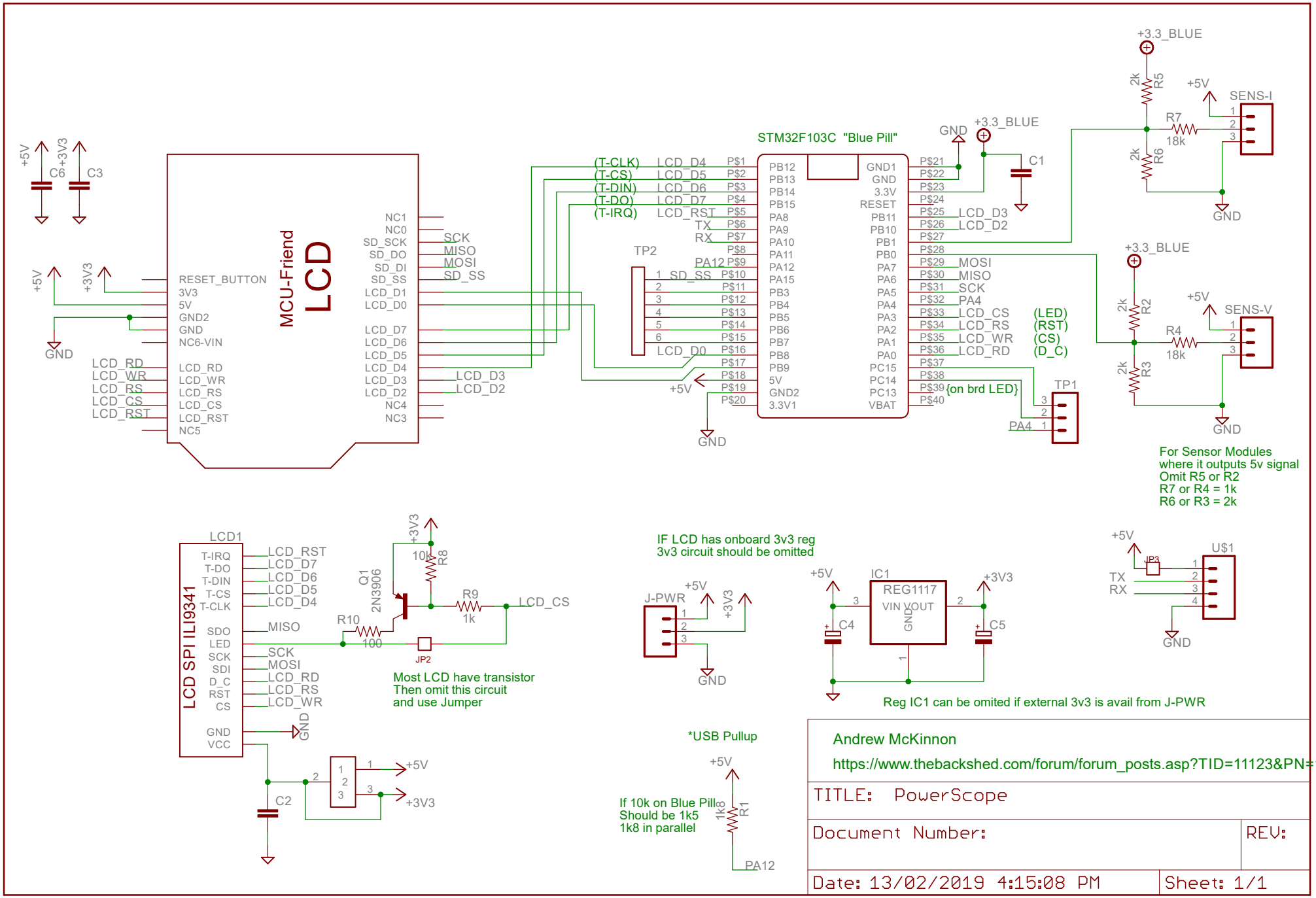
MCU-Friend
LCD
RESET_BUTTON
3V3
5V
GND2
GND
NC6-VIN
LCD_RD
LCD_WR
LCD_RS
LCD_CS
LCD_RST
NC5
NC1
NC0
SD_SCK
SD_DO
SD_DI
SD_SS
LCD_D1
LCD_D0
LCD_D7
LCD_D6
LCD_D5
LCD_D4
LCD_D3
LCD_D2
NC4
NC3
SCK
MISO
MOSI
SD_SS
LCD_D3
LCD_D2
STM32F103C "Blue Pill"
(T-CLK) LCD_D4
(T-CS) LCD_D5
(T-DIN) LCD_D6
(T-DO) LCD_D7
(T-IRQ) LCD_RST
TX
RX
PA12
TP2
LCD_D0
PB12
PB13
PB14
PB15
PA8
PA9
PA10
PA11
PA12
PA15
PB3
PB4
PB5
PB6
PB7
PB8
PB9
5V
GND2
3.3V1
GND1
GND
3.3V
RESET
PB11
PB10
PB1
PB0
PA7
PA6
PA5
PA4
PA3
PA2
PA1
PA0
PC15
PC14
PC13
VBAT
LCD_D3
LCD_D2
MOSI
MISO
SCK
PA4
LCD_CS
LCD_RS
LCD_WR
LCD_RD
(LED)
(RST)
(CS)
(D_C)
{on brd LED}
TP1
PA4
+3.3_BLUE
GND
C1
C6
C3
+5V
+3V3
SENS-I
SENS-V
R5
R6
R7
R2
R3
R4
2k
18k
For Sensor Modules
where it outputs 5v signal
Omit R5 or R2
R7 or R4 = 1k
R6 or R3 = 2k
LCD1
LCD SPI ILI9341
T-IRQ
T-DO
T-DIN
T-CS
T-CLK
SDO
LED
SCK
SDI
D_C
RST
CS
GND
VCC
LCD_RST
LCD_D7
LCD_D6
LCD_D5
LCD_D4
MISO
SCK
MOSI
LCD_RD
LCD_RS
LCD_WR
Q1
2N3906
R8
10k
R9
1k
R10
100
LCD_CS
JP2
Most LCD have transistor
Then omit this circuit
and use Jumper
C2
IF LCD has onboard 3v3 reg
3v3 circuit should be omitted
J-PWR
IC1
REG1117
VIN VOUT
GND
C4
C5
Reg IC1 can be omited if external 3v3 is avail from J-PWR
U$1
JP3
*USB Pullup
If 10k on Blue Pill
Should be 1k5
1k8 in parallel
R1
1k8
PA12
Andrew McKinnon
https://www.thebackshed.com/forum/forum_posts.asp?TID=11123&PN=1
TITLE: PowerScope
Document Number:
REV:
Date: 13/02/2019 4:15:08 PM
Sheet: 1/1