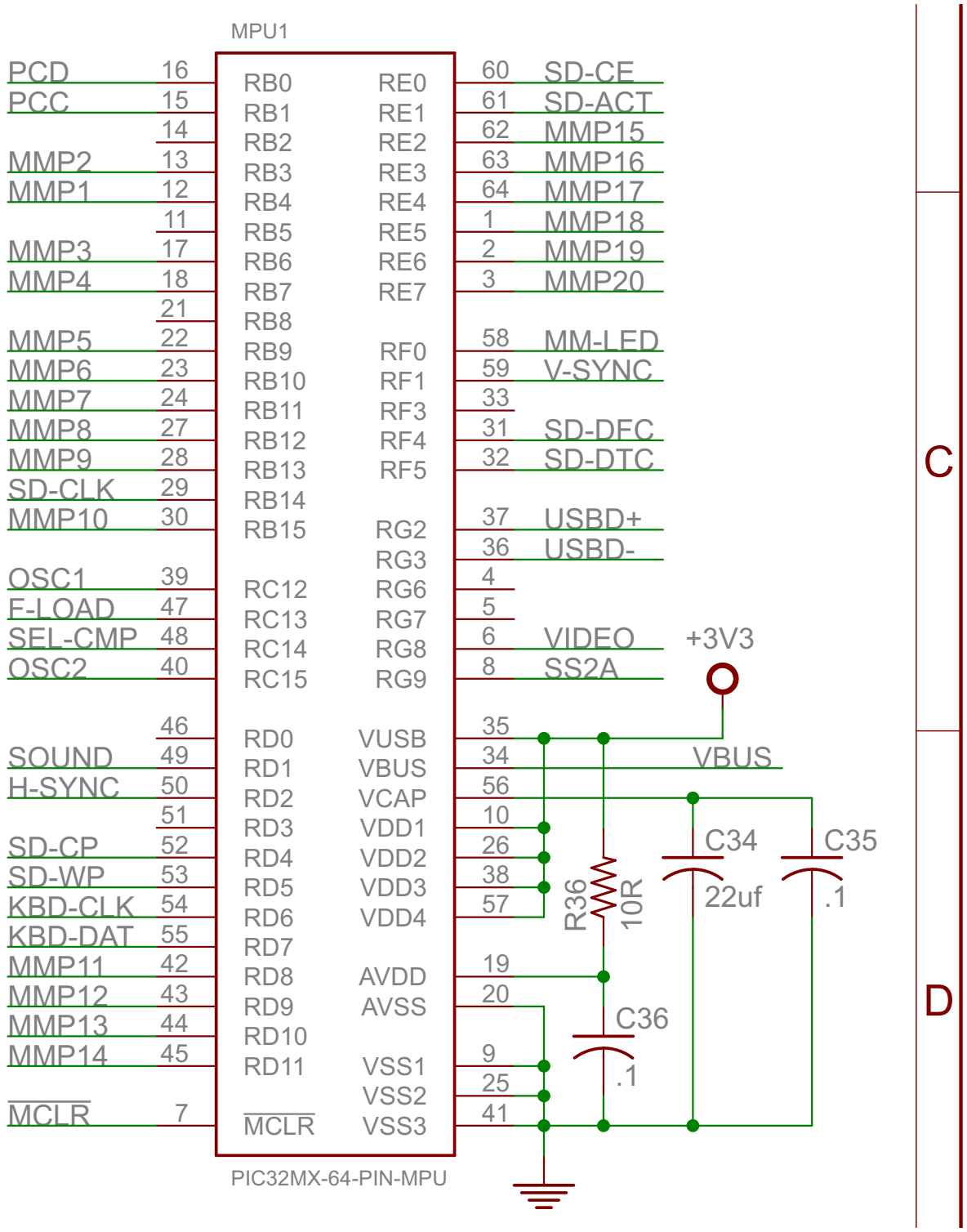
MPU1
PCD 16
PCC 15
14
MMP2 13
MMP1 12
11
MMP3 17
MMP4 18
21
MMP5 22
MMP6 23
MMP7 24
MMP8 27
MMP9 28
SD-CLK 29
MMP10 30
OSC1 39
F-LOAD 47
SEL-CMP 48
OSC2 40
46
SOUND 49
H-SYNC 50
51
SD-CP 52
SD-WP 53
KBD-CLK 54
KBD-DAT 55
MMP11 42
MMP12 43
MMP13 44
MMP14 45
MCLR 7
RB0
RB1
RB2
RB3
RB4
RB5
RB6
RB7
RB8
RB9
RB10
RB11
RB12
RB13
RB14
RB15
RC12
RC13
RC14
RC15
RD0
RD1
RD2
RD3
RD4
RD5
RD6
RD7
RD8
RD9
RD10
RD11
MCLR
RE0
RE1
RE2
RE3
RE4
RE5
RE6
RE7
RF0
RF1
RF3
RF4
RF5
RG2
RG3
RG6
RG7
RG8
RG9
VUSB
VBUS
VCAP
VDD1
VDD2
VDD3
VDD4
AVDD
AVSS
VSS1
VSS2
VSS3
60 SD-CE
61 SD-ACT
62 MMP15
63 MMP16
64 MMP17
1 MMP18
2 MMP19
3 MMP20
58 MM-LED
59 V-SYNC
33
31 SD-DFC
32 SD-DTC
37 USBD+
36 USBD-
4
5
6 VIDEO
8 SS2A
35
34 VBUS
56
10
26
38
57
19
20
9
25
41
+3V3
R36
10R
C34
22uf
C35
.1
C36
.1
PIC32MX-64-PIN-MPU
C
D