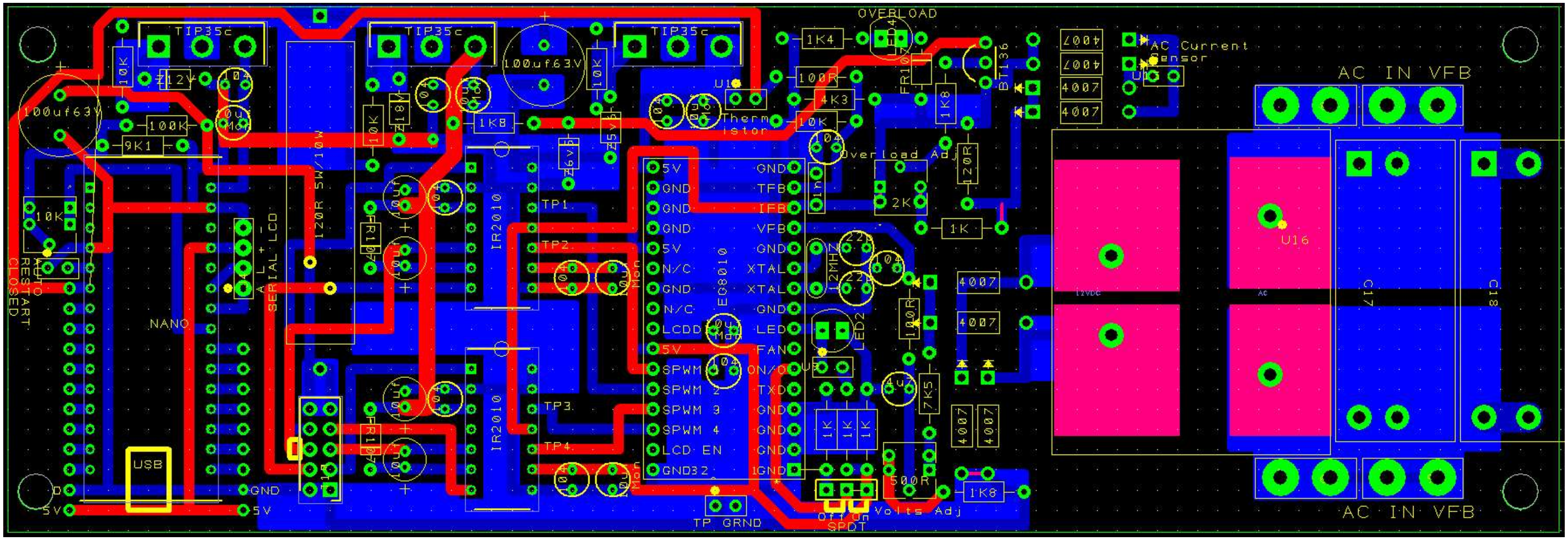

TIP35c
TIP35c
TIP35c
100uf63V
100uf63V
OVERLOAD
1K4
100R
4K3
10K
Thermistor
U1
BT136
AC Current Sensor
AC IN VFB
AC IN VFB
4007
12V
10K
100K
9K1
1K8
18V
6V8
5V6
120R 5W/10W
SERIAL LCD
AUTO RESTART CLOSED
NANO
USB
GND
5V
IR2010
IR2010
TP1
TP2
TP3
TP4
EG8010
5V
GND
GND
GND
5V
N/C
GND
N/C
LCDD
5V
SPWM 1
SPWM 2
SPWM 3
SPWM 4
LCD EN
GND32
GND
TFB
IFB
VFB
GND
XTAL
XTAL
GND
LED
FAN
ON/OFF
TXD
GND
GND
GND
1GND
Overload Adj
2K
1K
120R
12MHZ
22p
LED2
7K5
4u7
500R
1K8
Volts Adj
Off On
SPDT
TP GRND
U16
C17
C18