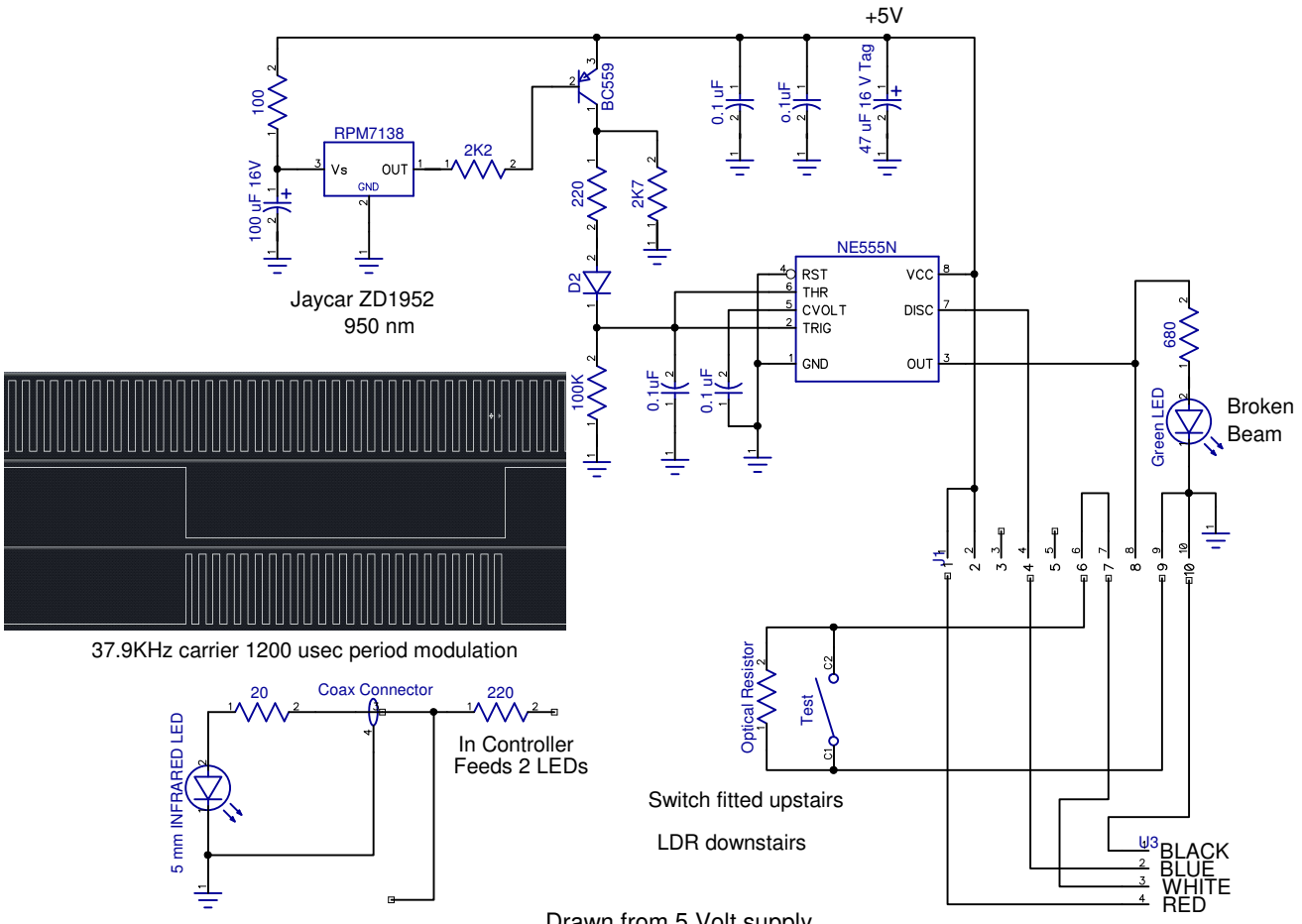

INFRARED BARRIER DETECTOR

Keith Williams March 2014

SIZE	FSCM NO.	DWG NO.	REV
SCALE		Sheet 1	